JOHNSON PUMP
AN SPX BRAND

CombiNorm

Centrifugal pump according to EN 733 (DIN 24255)

SPX®

CombiNorm
Always the right pump!

The CombiNorm is a centrifugal pump according to EN 733 (DIN 24255). This is one of the most versatile pump types. The pump has a wide range of shaft sealing options, varying from gland packing to balanced cartridge double seal. Standard and heavy duty bearings are available, either grease or oil lubricated. That's why CombiNorm is always the right pump!

CombiNorm represents a range of horizontal centrifugal pumps suited for handling low-viscosity, clean or slightly contaminated liquids. The pump is designed to EN 733 (DIN 24255); however the number of available types is somewhat larger, which provides a wider hydraulic field.

A characteristic of the CombiNorm is the large number of material, shaft seal and bearing system options. The modular design offers maximum interchangeability between the variants. Hence CombiNorm is able to handle most pump duties. If more sophisticated components are required, only the relevant bearing or shaft seal module needs to be replaced with the one having the right specifications.

The Back Pull Out design greatly facilitates maintenance of the CombiNorm. Thanks to the similarity between the structural parts, the stock of spare parts can be limited.

CombiNorm

Benefits

- Available in several materials
- Only 5 bearing groups for the whole range
- Suitable for a wide range of duties
- Mechanical seals according to EN 12756 (DIN 24960)
- Single and double cartridge seals
- Standard type gland packing
- Back Pull Out principle

From know-how to finding solutions

Industry

CombiNorm's ample choice of shaft sealing options and its availability in several materials makes it a very suitable pump for general purposes. Complying to EN 733 (DIN 24255), provided with industrial standard gland packing or mechanical seals according to EN 12756 (DIN 24960) CombiNorm is always the right pump.

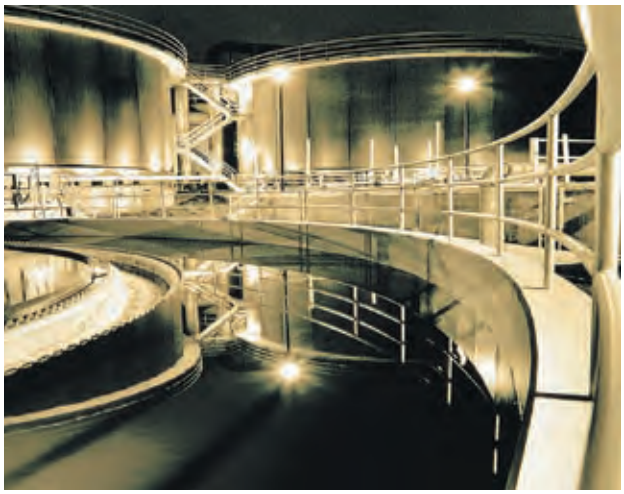

Utility

Applications of the CombiNorm within utility buildings are as general duty pumps, circulation pumps in heating systems and pumps in water purification plants.

Features and *Benefits*

Pump performance
- optimised volute design
- *high efficiency*
- smooth surfaces
- *minimal internal losses*

Material options
- available in cast iron, nodular cast iron and bronze
- impellers available in cast iron, bronze and stainless steel
- other material available upon request
- *suitable for a wide range of applications*

Suction capabilities
- smooth suction entry in pump casing
- smooth surface
- *optimum NPSH*
- anti rotation vane
- *minimal flow distortion giving better suction capabilities*

Pump casing
- flanges according to ISO 7005 PN 10/PN 16
- max. working pressure 1000 kPa (10 bar)
- *wide range of applications*
- large drain opening
- *complete and fast draining of the casing*

Impeller locking
- stainless steel impeller cap nut with flat gasket
- *reliable and economic locking*

Impeller back vanes
- flat cover for hydraulic balancing
- back vanes for hydraulic balancing
- *extended bearing life*
- *keeps solids away from shaft sealing area*
- *circulation flow over mechanical seal*

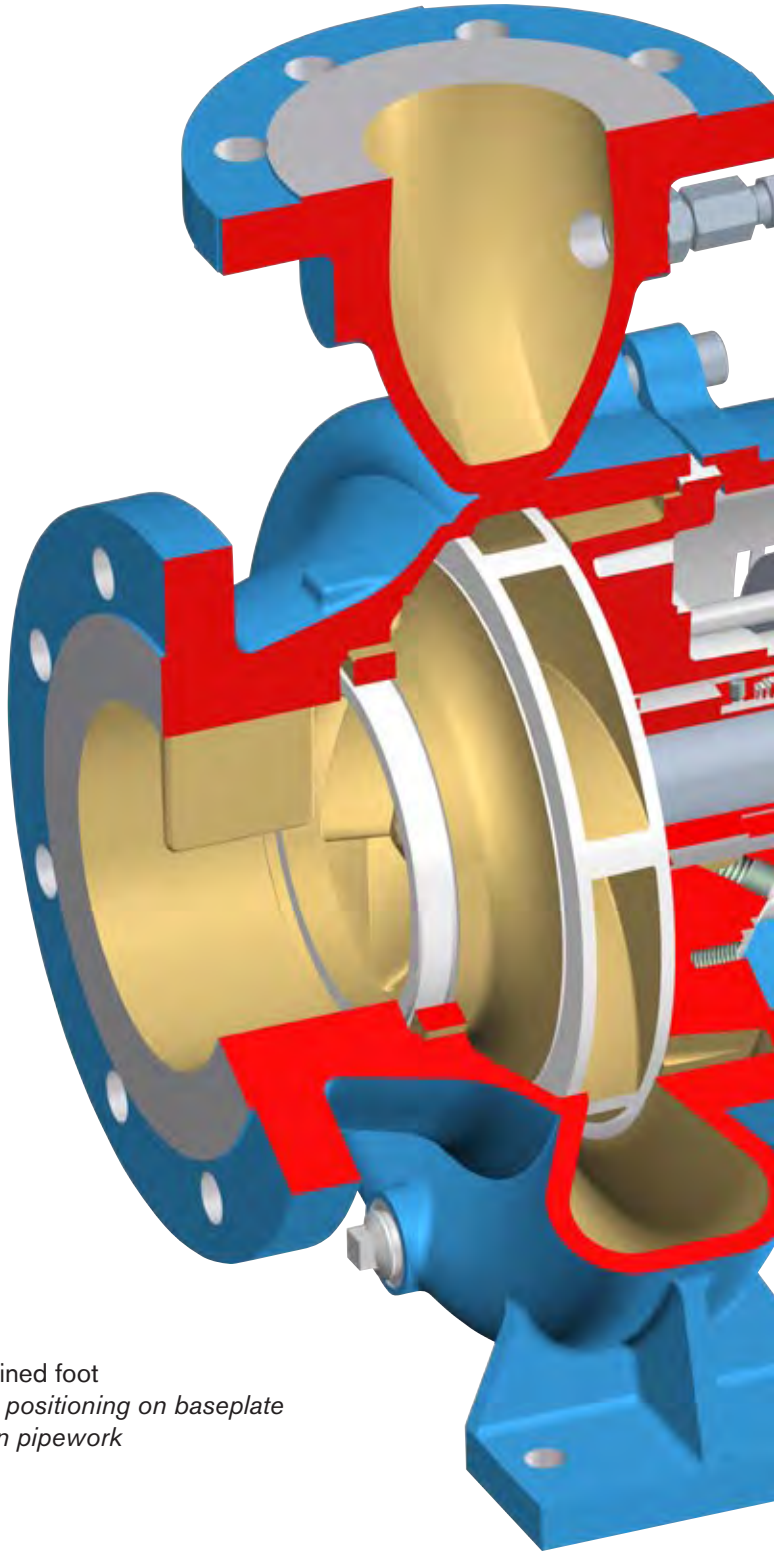

Foot
- machined foot
- *exact positioning on baseplate and in pipework*

Shaft
- steel alloy or stainless steel shaft
- *rigid, reliable shaft*
- most seal options with shaft sleeve (extended impeller key ensures co-rotation of the shaft)
- *no contact between shaft and pumped liquid when shaft sleeve applied*

Shaft sealing
- 8 possible mechanical EN 12756 (DIN 24960)-seal options, including cartridge seals
- sealing rings and elastomers in several possible combinations
- mechanical seal flushed by pumped liquid (plan 11)
- quenched mechanical seal option mechanical seal option with cooling / heating jacket
- 3 possible gland packing options e.g. with cooling cover or external flush
- *suitable for many possible applications*
- *suitable for many liquids*
- *also suitable for high temperatures*

Oil lubrication
- breather / filling plug on top
- oil bath
- oil sight glass
- constant level oiler
- large drain plug

Bearings
- 2-deep groove ball bearings sealed for life or oil lubricated double row angular contact bearing and roller bearing greased for re-lubrication or oil lubricated
- *extended MTBF*
- *economic bearing lock-up*
- rigid cast iron bearing bracket construction
- *exact alignment*

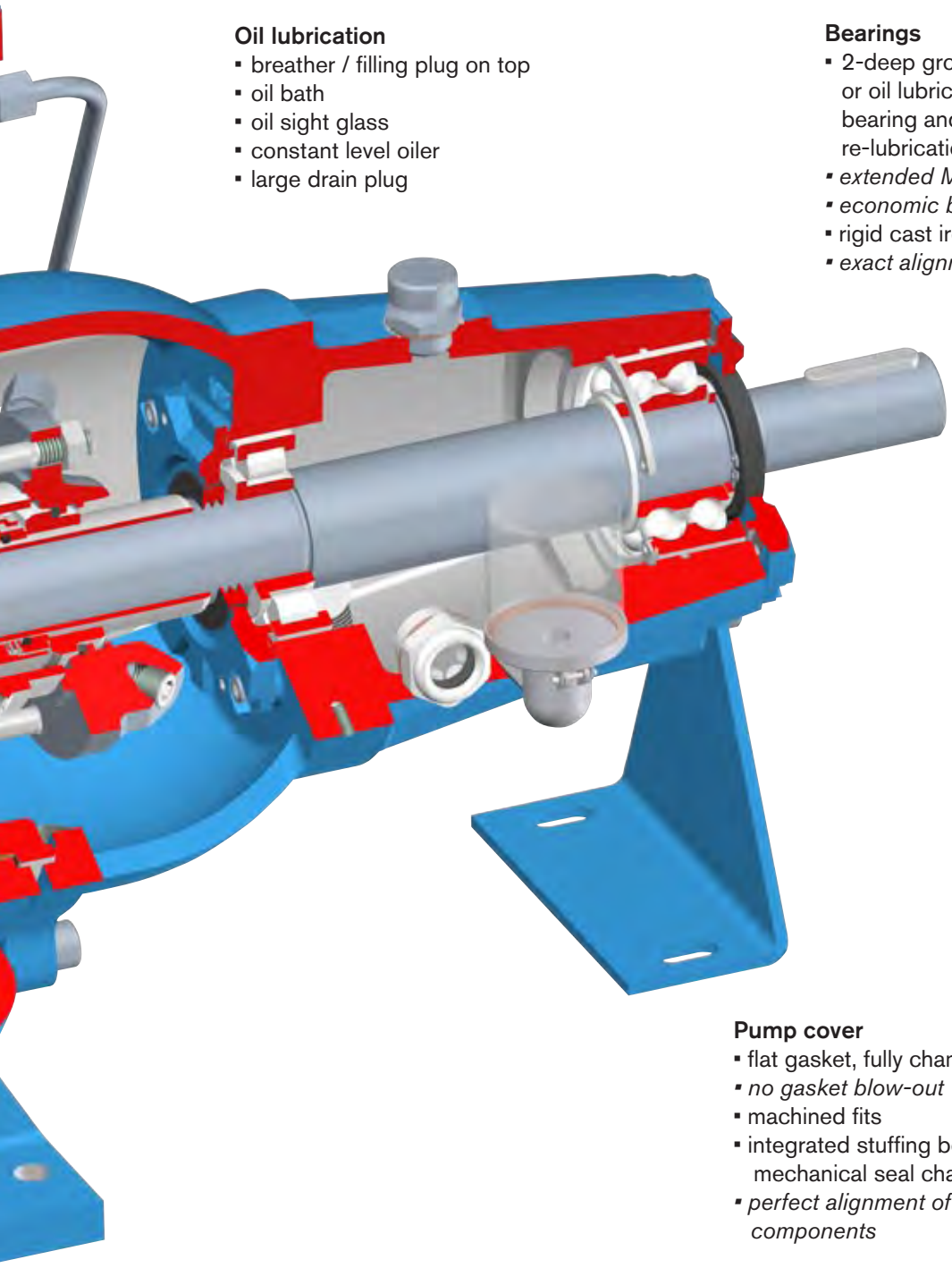

Easy and low cost maintenance
- Back Pull Out principle
- *reduced maintenance downtimes, quick and easy impeller replacement*
- mechanical seals according to EN 12756 (DIN 24960)
- *reduced maintenance costs*
- cartridge seals
- changeable wear ring
- *reduced maintenance costs*

Pump cover
- flat gasket, fully chambered
- *no gasket blow-out*
- machined fits
- integrated stuffing box/ mechanical seal chamber
- *perfect alignment of all components*

Shaft sealings

CombiNorm is available with the following shaft sealing configurations:

Gland packing options:

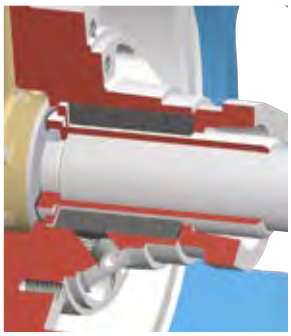

S2
Soft packing ring, shaft sleeve

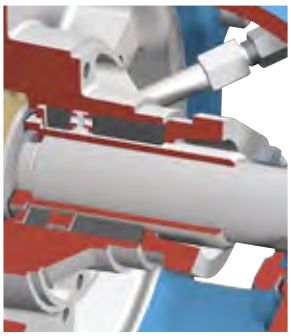

S3
Soft packing ring, shaft sleeve, lantern ring

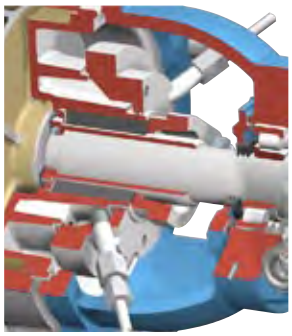

S4
Soft packing ring, shaft sleeve, cooling jacket

Mecahnical seal options:

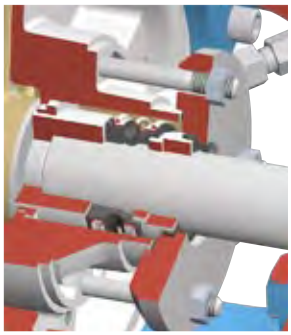

M1
Single mechanical seal, unbalanced

M2 MG12 / M7N
Single mechanical seal, unbalanced, shaft sleeve

M3 HJ92N / HJ977GN
Single mechanical seal, balanced, shaft sleeve

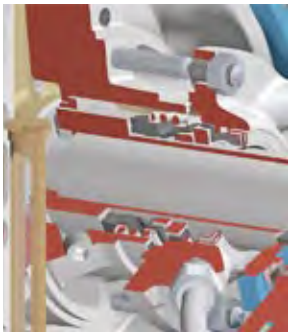

MQ2 MG12 / M7N
Single mechanical seal, unbalanced, dry-running protection or pressure-less quench, shaft sleeve

MQ3 HJ92N / HJ977GN
Single mechanical seal, balanced, dry-running protection or pressure-less quench, shaft sleeve

MW2 MG12 / M7N
Single mechanical seal, unbalanced, cooling/heating jacket, shaft sleeve

MW3 HJ92N / HJ977GN
Single mechanical seal, balanced, cooling/heating jacket, shaft sleeve

Cartridge seals
single, single with quench and double seals

Technical data

Max. capacity	1500 m^3/h
Max. head	100 m
Max. working pressure	1000 kPa (10 bar)
Max. temperature	200°C
Max. speed	3600 rpm

Hydraulic performance data

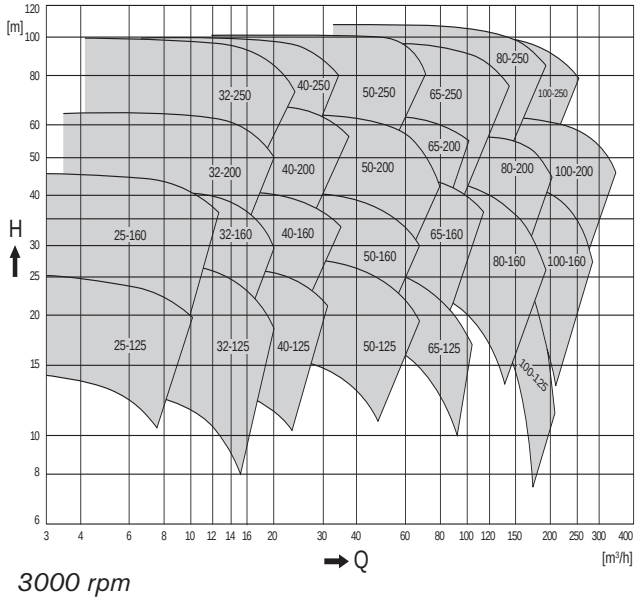

3000 rpm

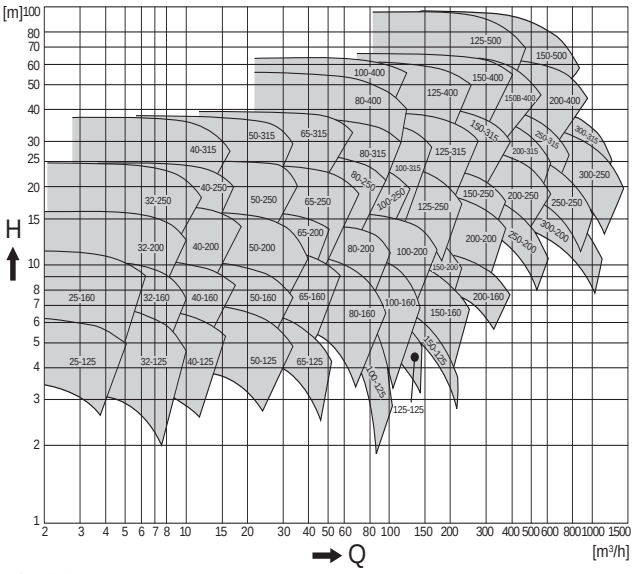

1500 rpm

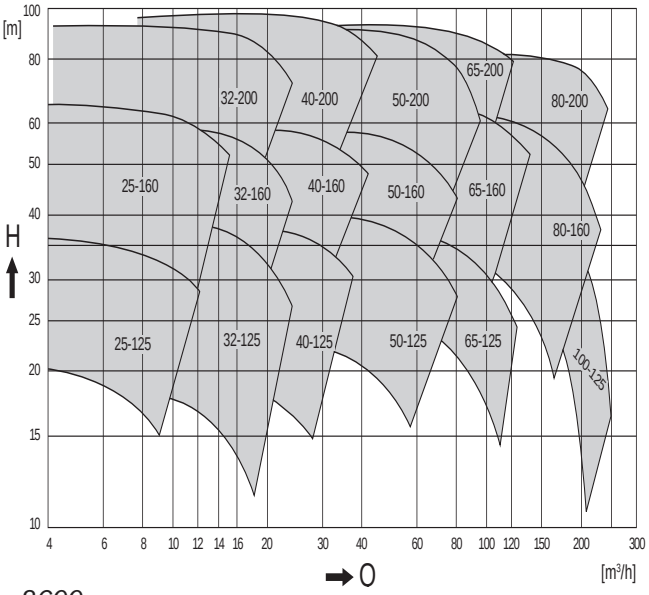

3600 rpm

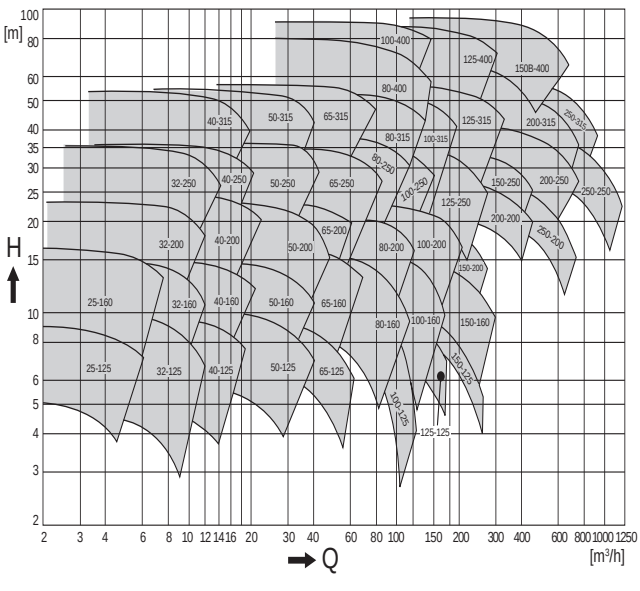

1800 rpm

Subject to alterations

SPX®
WHERE IDEAS MEET INDUSTRY

SPX Flow Technology (India) Private Limited
Survey No. 275, Odhav Road, Odhav, Ahmedabad : 382415. India.
Tele: 079-22870311, 22873005
Fax: 079-22870593, 22872522
Email: Johnson-pump.in@processequipment.spx.com
Web: www.johnson-pump.com/in & www.spxft.com

For more information about our worldwide locations, approvals, certifications, and local representatives, please visit www.johnson-pump.com and www.spxft.com.

SPX Corporation reserves the right to incorporate our latest design and material changes without notice or obligation.
Design features, materials of construction and dimensional data, as described in this bulletin, are provided for your information only and should not be relied upon unless confirmed in writing.

Issued: 02/2008 Copyright

© 2008 SPX Corporation